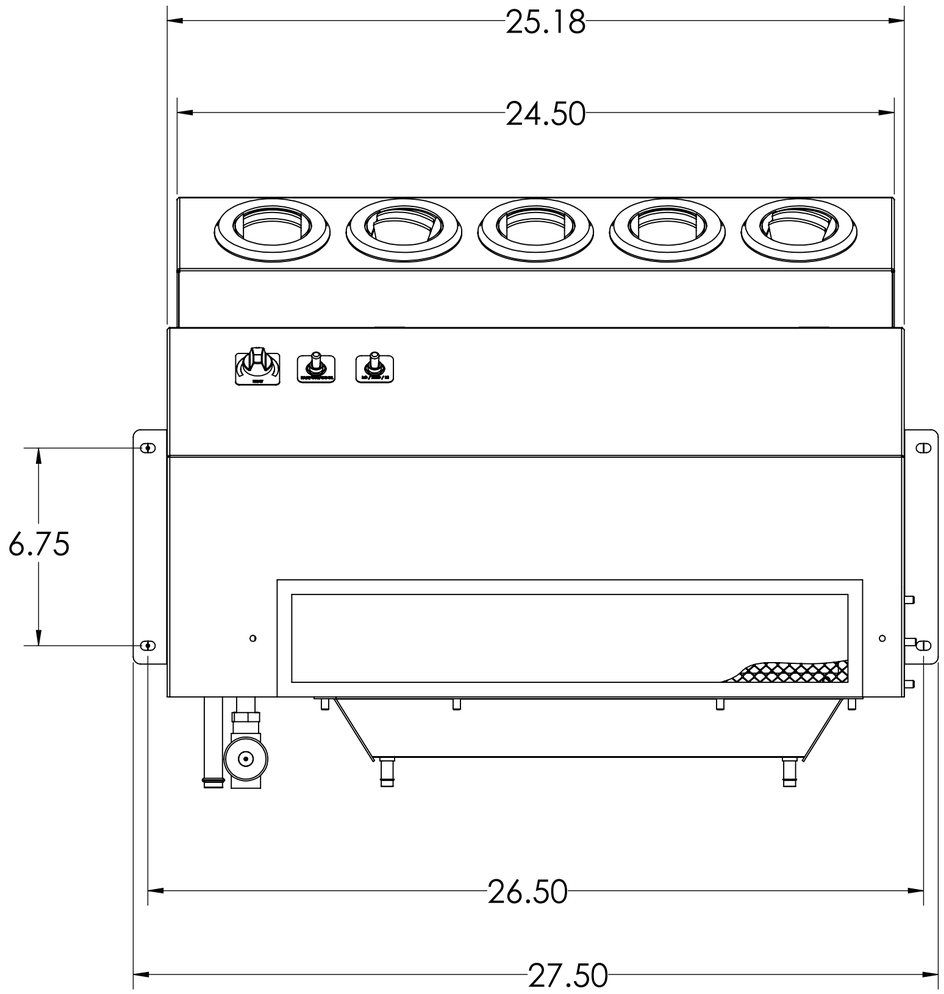

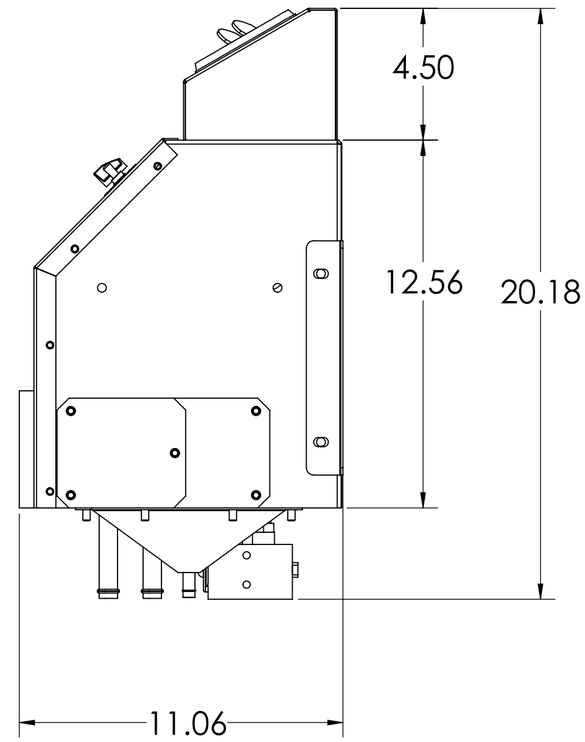

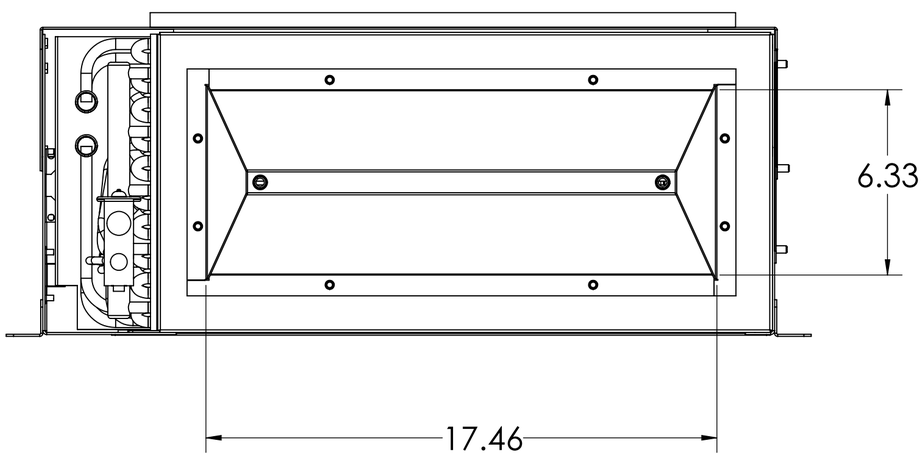

ECN#	REV	DESCRIPTION	DATE	APPROVED

REVISIONS

UNLESS OTHERWISE SPECIFIED:

DIMENSIONS ARE IN INCHES
TOLERANCES:
ANGULAR: BEND ± 1 DEG
TWO PLACE DECIMAL ± 0.030
THREE PLACE DECIMAL ± 0.010

DO NOT SCALE DRAWING

MATERIAL

FINISH GRAY KRINKLE POWDER PAT2-70141-C50

	NAME	DATE
DRAWN	PDC	8/21/2012
CHECKED		
ENG APPR.		
MFG APPR.		

PROPRIETARY AND CONFIDENTIAL
THE INFORMATION CONTAINED IN THIS DRAWING IS THE SOLE PROPERTY OF VISIONAIRE, INC.,. ANY REPRODUCTION IN PART OR AS A WHOLE WITHOUT THE WRITTEN PERMISSION OF VISIONAIRE, INC. IS PROHIBITED.

VISIONAIRE,INC.

DISCRIPTION:

NON DUCT

SIZE	PART NO.	REV
C	44-4161-X000	0

SCALE: 1:4 | WEIGHT: | SHEET 1 OF 3